Work Order ID 65440

Monday, January 17, 2011 4:00:18 PM

Item ID: D4000-041 **Accept** **Setup Start** **Stop**

Revision ID:

Item Name: Drain Fitting Assembly, Aft

Start Date: 1/18/2011 **Start Qty:** ~~4.00~~ 2 lb **Cust Item ID:**

Required Date: 2/1/2011 **Req'd Qty:** ~~4.00~~ 2 lb **Customer:**

Reference:

Approvals: **Process Plan:** MF **Date:** 11-01-18 **Tooling:** **Date:** **Run Start** **Stop**

QC: **Date:** **SPC (Y/N):** **Date:**

Sequence ID/ Work Center ID	Operation Description	Set Up/ Run Hours	Tool ID	Tool #	Plan Code	Accept Qty	Reject Qty	Reject Number	Insp. Stamp
Draw Nbr	**Revision Nbr**								
D4000	A								
100	Weld per dwg A/R Aluminum rod Batch: M108436	0.00							
Large Fab			11.03.18			2	Ø		
	Memo	0.00							
Large Fab									
110	QC9- Inspect visual per QSI004- Fusion Welds	0.00							
QC						2	Ø	BE 11/03/18	
	Memo	0.00							
Quality Control									
120	QC5- Inspect part completeness to step on W/O	0.00							
QC			Sil03/18			(+2)			
	Memo	0.00							
Quality Control									

Dart Aerospace Ltd

W/O:		WORK ORDER CHANGES					
DATE	STEP	PROCEDURE CHANGE	By	Date	Qty	Approval Chief Eng / Prod Mgr	Approval QC Inspector

Part No: _____ **PAR #:** _____ **Fault Category:** _____ **NCR:** Yes No **DQA:** _____ **Date:** _____

Resolution: _____ **Disposition:** _____ **QA: N/C Closed:** _____ **Date:** _____

NCR:		WORK ORDER NON-CONFORMANCE (NCR)						
DATE	STEP	Description of NC Section A	Corrective Action Section B			Verification Section C	Approval Chief Eng	Approval QC Inspector
			Initial Chief Eng	Action Description Chief Eng	Sign & Date			

NOTE: Date & initial all entries

H:\FORMS\Quality Assurance\approved QA\NCRWO RevE

Work Order ID 65440

Monday, January 17, 2011 4:00:18 PM

Item ID: D4000-041 **Accept** **Setup Start**

Revision ID: **Stop**

Item Name: Drain Fitting Assembly, Aft

Start Date: 1/18/2011 **Start Qty:** 4.00 **Cust Item ID:**

Required Date: 2/1/2011 **Req'd Qty:** 4.00 **Customer:**

Reference:

Run Start

Approvals: **Process Plan:** _____ **Date:** _____ **Tooling:** _____ **Date:** _____

Stop

QC: _____ **Date:** _____ **SPC (Y/N):** _____ **Date:** _____

Sequence ID/ Work Center ID	Operation Description	Set Up/ Run Hours	Tool ID	Tool #	Plan Code	Accept Qty	Reject Qty	Reject Number	Insp. Stamp
130	Identify as per dwg & Stock Location	0.00							
Packaging	Memo	0.00							
Packaging									
140	QC21- Final Inspection - Work Order Release	0.00							
QC	Memo	0.00							
Quality Control									

11/3/18 (2)

11/3/21

11-03-18 (2)

Dart Aerospace Ltd

W/O:		WORK ORDER CHANGES					
DATE	STEP	PROCEDURE CHANGE	By	Date	Qty	Approval Chief Eng / Prod Mgr	Approval QC Inspector

Part No: _____ **PAR #:** _____ **Fault Category:** _____ **NCR:** Yes No **DQA:** _____ **Date:** _____

Resolution: _____ **Disposition:** _____ **QA: N/C Closed:** _____ **Date:** _____

NCR:		WORK ORDER NON-CONFORMANCE (NCR)						
DATE	STEP	Description of NC Section A	Corrective Action Section B			Verification Section C	Approval Chief Eng	Approval QC Inspector
			Initial Chief Eng	Action Description Chief Eng	Sign & Date			

NOTE: Date & initial all entries

Picklist Print

Monday, January 17, 2011 4:00:14 PM

Work Order ID: 65440

Parent Item: D4000-041

Parent Item Name: Drain Fitting Assembly, Aft

Start Date: 1/18/2011 **Required Date:** 2/1/2011

Start Qty: 4.00 **Required Qty:** 4.00

Comments: IPP rev A 10.01.20 new issue Prelim EC verified by:DD IPP rev B 10.05.13 ecn10-562 EC verified by:DD

Component Item ID/ Item Name	Replacement Item ID	Mfg/ Purch	Bin Item	Primary Location	Last Location	Route Seq ID	Unit of Measure	Qty on Hand	Qty per Kit	Total Qty	Qty Issued	Date Issued	Status
D4000-3 Fuel Sump Drain Fitting		Manufactured	No			100	Each	5.0000	1	~~4~~ 2	11·03·18		
				Location		**Loc Qty**		**Loc Code**					
				ENG B64978		1				2			
					55935	1							
				ST108		4							
					64045	4							
D4003-1 Internal Drain Line, Aft		Manufactured	No			100	Each	0.0000	1	~~4~~ 2	11·03·18	B64976	

Dart Aerospace Ltd

W/O:		WORK ORDER CHANGES					
DATE	STEP	PROCEDURE CHANGE	By	Date	Qty	Approval Chief Eng / Prod Mgr	Approval QC Inspector

Part No: _____ PAR #: _____ Fault Category: _____ NCR: Yes No DQA: _____ Date: _____

Resolution: _____ Disposition: _____ QA: N/C Closed: _____ Date: _____

NCR:		WORK ORDER NON-CONFORMANCE (NCR)						
DATE	STEP	Description of NC Section A	Corrective Action Section B			Verification Section C	Approval Chief Eng	Approval QC Inspector
			Initial Chief Eng	Action Description Chief Eng	Sign & Date			

NOTE: Date & initial all entries

H:\fFORMS\Quality Assurance\approved QA\NCRWO RevE

ITEM	QTY. -043	QTY. -045	P/N	DESCRIPTION	JOHN CAMERON AVIATION PART NUMBER
1	X		D4000-041	DRAIN FITTING ASSEMBLY, AFT	JCA-M47-1-06
2		X	D4000-043	DRAIN FITTING ASSEMBLY, FWD	JCA-M47-1-15
3	1	1	D4000-3	FUEL SUMP DRAIN FITTING	
4	1		D4003-1	INTERNAL DRAIN LINE, AFT	
5		1	D4003-3	INTERNAL DRAIN LINE, FWD	

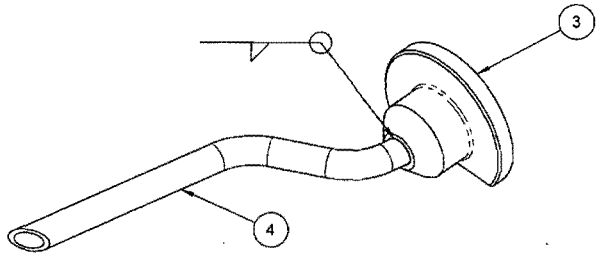

D4000-041 DRAIN FITTING ASSEMBLY, AFT

#65440

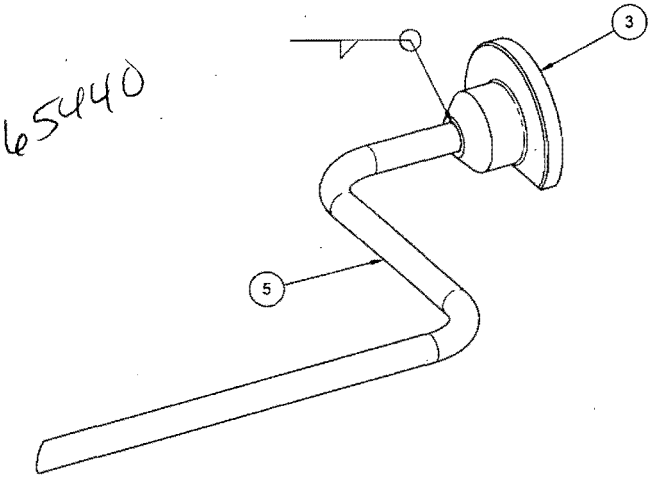

D4000-043 DRAIN FITTING ASSEMBLY, FWD

RELEASED
2010 -05- 05

NOTES:
1) MATERIAL: N/A
2) FINISH: N/A
3) TOLERANCES: PER DART QSI 018 UNLESS OTHERWISE NOTED
4) UNITS: INCHES UNLESS OTHERWISE NOTED
5) BREAK SHARP EDGES: 0.005 TO 0.010 MAX
6) IDENTIFICATION: IDENTIFY WITH DART P/N "D4000-043/-045" AND B/N USING FINE POINT PERMANENT INK MARKER
7) WEIGHT: D4000-043 - 0.04 lbs
D4000-045 - 0.05 lbs

REV.	DESCRIPTION	BY	DATE
A	NEW ISSUE		10.02.10

DESIGN		DART AEROSPACE LTD HAWKESBURY, ONTARIO, CANADA	
DRAWN			
CHECKED		DRAWING NO. D4000	REV. A
MFG. APPR.			SHEET 1 OF 8
APPROVED		TITLE FITTING	SCALE NTS
DE APPR.			
DATE	10.02.10		

COPYRIGHT © 2010 BY DART AEROSPACE LTD
THIS DOCUMENT IS PRIVATE AND CONFIDENTIAL AND IS SUPPLIED ON THE EXPRESS CONDITION THAT IT IS NOT TO BE USED FOR ANY PURPOSE OR COPIED OR COMMUNICATED TO ANY OTHER PERSON WITHOUT WRITTEN PERMISSION FROM DART AEROSPACE LTD

Dart Aerospace Ltd

W/O:		WORK ORDER CHANGES					
DATE	STEP	PROCEDURE CHANGE	By	Date	Qty	Approval Chief Eng / Prod Mgr	Approval QC Inspector

Part No: _____ **PAR #:** _____ **Fault Category:** _____ **NCR:** Yes No **DQA:** _____ **Date:** _____

Resolution: _____ **Disposition:** _____ **QA: N/C Closed:** _____ **Date:** _____

NCR:		WORK ORDER NON-CONFORMANCE (NCR)						
DATE	STEP	Description of NC Section A	Corrective Action Section B			Verification Section C	Approval Chief Eng	Approval QC Inspector
			Initial Chief Eng	Action Description Chief Eng	Sign & Date			

NOTE: Date & initial all entries

H:\fFORMS\Quality Assurance\approved QA\NCRWO RevE